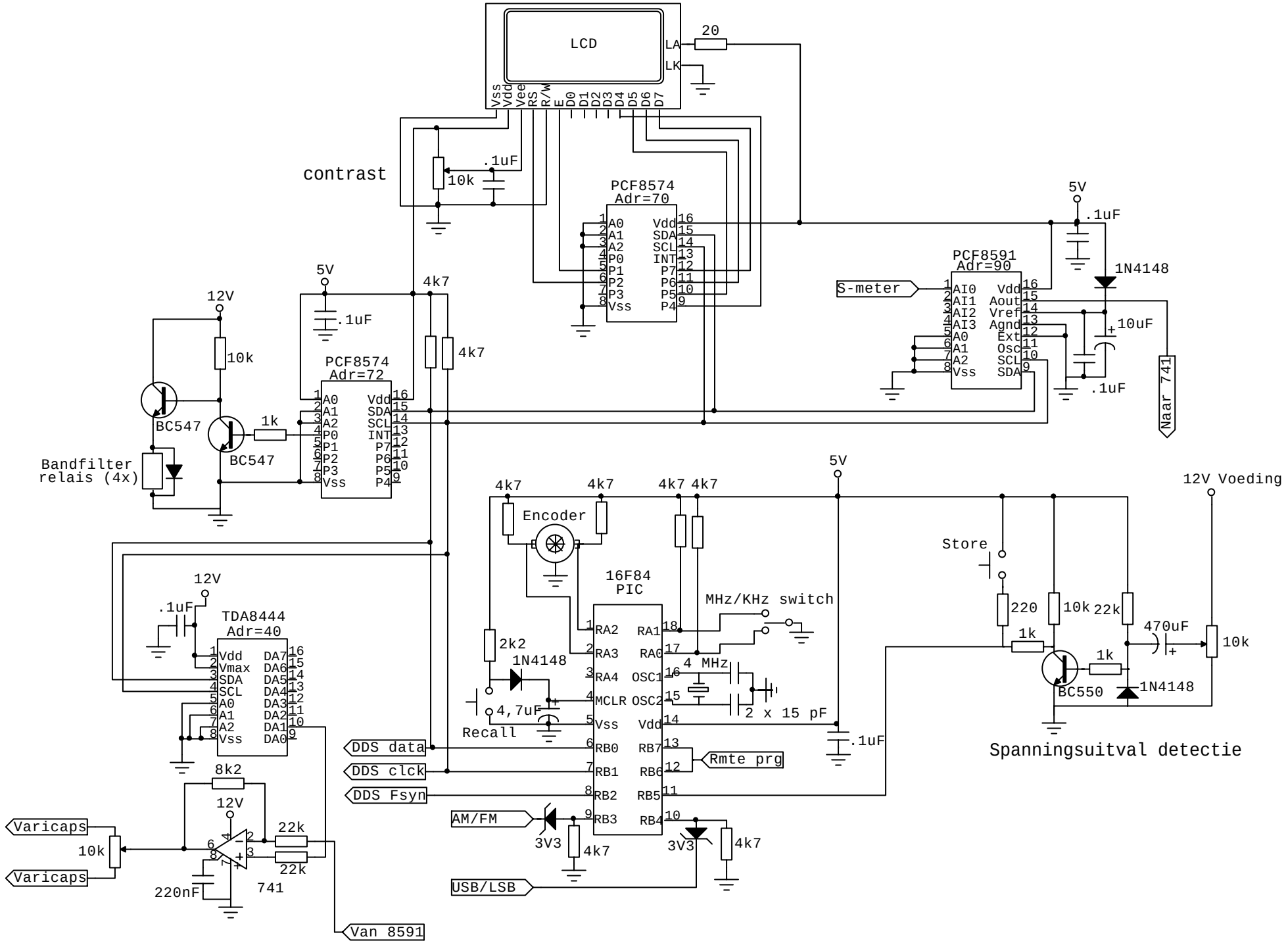

PIC-DDS HF Receiver © PA0RWE 01-01-2004